深圳市天广宽科技有限公司
Tel: 0755-83685744 23007596 Fax: 0755-23007597
http://www.tgklcd.com E-mail: sg2966@163.com
销售公司地址：深圳市福田区华强北路赛格广场二楼2834号

TM12864F-4

① PHYSICAL DIMENSION/外型尺寸

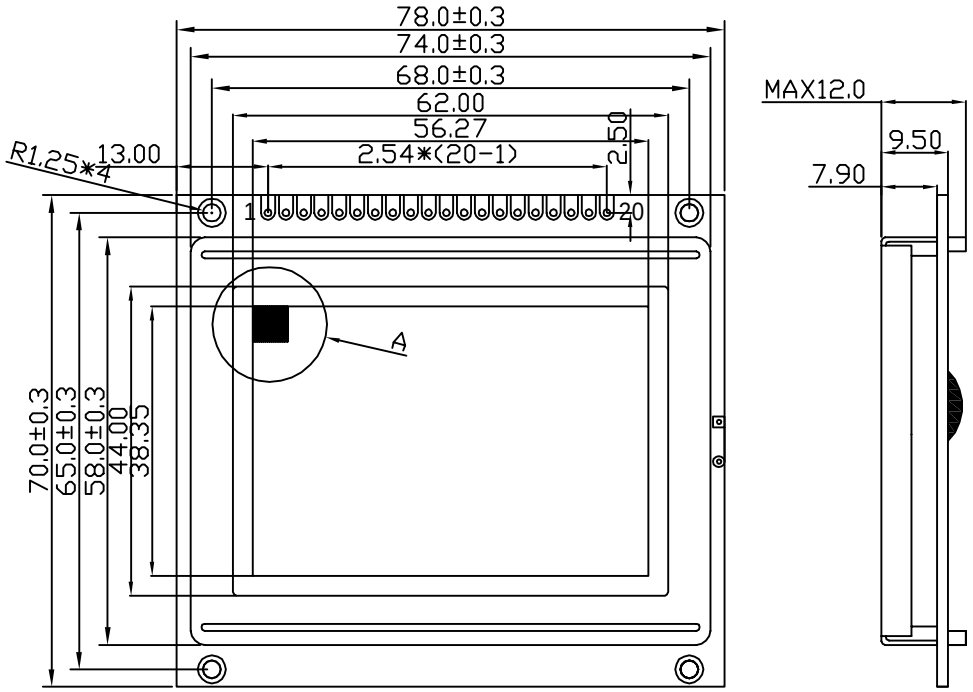

Disply Format
128×64DOTS
Drlvlng Merhod
1/64 Duty
1/9 Bais

② FEATURES/特征

Feature(特征)		UNIT(单位)
LCD type & Colour(类型及颜色)	STN Yellow-green ;STN Blue	
View Angle(视角)	6 O'clock	
Operating temperature(工作温度)	-20℃ ----+70℃	
Storage Temperature(贮存温度)	-30℃ ----+80℃	
Control IC & Package(控制芯片及封装)	ST7920 , COB	
Weight(重量)	73 (With B/L)	g
Backlight(背光类型)	LED	

Ta=25℃		MIN(最小)	TYP(典型)		MAX(最大)	UNIT(单位)
Supply current don't contain backlight(无背光时电流)		0		12.0		mA
VDD(电源)		-0.3	3.3	5.0	5.5	V
VLCD-V0(LCD驱动电压)		0				V
Backlight LED (背光电压,电流)	侧背光	0	3.3	5.0	5.0	V
		0	75	75		mA
	底背光	0	3.3	5.0	5.5	V
		0	120	120		mA

③ PIN CONFIGURATION/管脚说明

PIN	SYMBOL	DESCRIPTION(定义描述)
1	VSS	Power ground (地)
2	VDD	Power positive(逻辑电压)(+5.0V)
3	V0	Operating voltage for LCD Driver(对比度调节)
4	RS(CS)	Chip select signal(片选)
5	R/W(SID)	Read or Write.(写数据)
6	E(CLK)	Enable trigger.(使能信号)
7 ~ 14	DB0 ~ DB7	Data bus [0~7]. There state I/O common terminal.(数据线0-7)
15	PSB	0: serial mode; 1: 8/4-bits parallel bus mode(0 ：低电位串口; 1：高电位并口)
16	NC	No connection
17	RST	Reset Signal (复位)
18	VOUT	Negative voltage output（正压输出）
19	BLA	Power supply for backlight(+)(背光正极)(+5.0V)
20	BLK	Power supply for backlight(-)(背光负极)

④ BLOCK DIAGRAM/原理电路

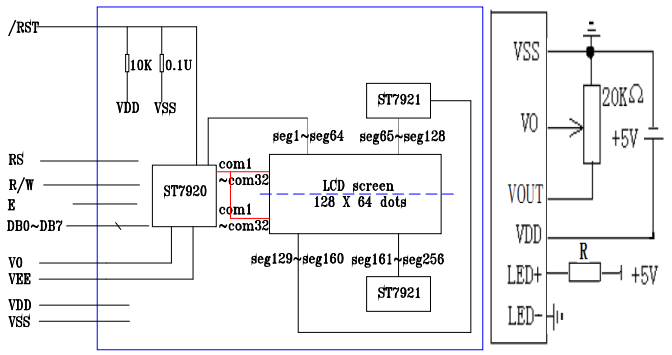

⑤ ELUCIDATION/补充备注

1. contain the controller cent simplified Chinese character of the Chinese word database and traditional Chinese character [含中文字库控制器分简体中文和繁体中文]

2.when the LCD screen has welding potentiometer (20 k), the third foot vo and 18th foot vout can be empty. [**当液晶屏已焊电位器（20K)时，第三脚V0和第18脚VOUT可以空脚**]